

Parallels Remote Application Server (RAS)

Deployment Guide

UPDATED: 27 July 2023

© 2022 Progress Software Corporation and/or one of its subsidiaries or affiliates. All rights reserved.

These materials and all Progress® software products are copyrighted and all rights are reserved by Progress Software Corporation. The information in these materials is subject to change without notice, and Progress Software Corporation assumes no responsibility for any errors that may appear therein. The references in these materials to specific platforms supported are subject to change.

#1 Load Balancer in Price/Performance, 360 Central, 360 Vision, Chef, Chef (and design), Chef Habitat, Chef Infra, Code Can (and design), Compliance at Velocity, Corticon, Corticon.js, DataDirect (and design), DataDirect Cloud, DataDirect Connect, DataDirect Connect64, DataDirect XML Converters, DataDirect XQuery, DataRPM, Defrag This, Deliver More Than Expected, DevReach (and design), Driving Network Visibility, Flowmon, Inspec, Ipswitch, iMacros, K (stylized), Kemp, Kemp (and design), Kendo UI, Kinvey, LoadMaster, MessageWay, MOVEit, NativeChat, OpenEdge, Powered by Chef, Powered by Progress, Progress, Progress Software Developers Network, SequeLink, Sitefinity (and Design), Sitefinity, Sitefinity (and design), Sitefinity Insight, SpeedScript, Stylized Design (Arrow/3D Box logo), Stylized Design (C Chef logo), Stylized Design of Samurai, TeamPulse, Telerik, Telerik (and design), Test Studio, WebSpeed, WhatsConfigured, WhatsConnected, WhatsUp, and WS_FTP are registered trademarks of Progress Software Corporation or one of its affiliates or subsidiaries in the U.S. and/or other countries.

Analytics360, AppServer, BusinessEdge, Chef Automate, Chef Compliance, Chef Desktop, Chef Workstation, Corticon Rules, Data Access, DataDirect Autonomous REST Connector, DataDirect Spy, DevCraft, Fiddler, Fiddler Classic, Fiddler Everywhere, Fiddler Jam, FiddlerCap, FiddlerCore, FiddlerScript, Hybrid Data Pipeline, iMail, InstaRelinker, JustAssembly, JustDecompile, JustMock, KendoReact, OpenAccess, PASOE, Pro2, ProDataSet, Progress Results, Progress Software, ProVision, PSE Pro, Push Jobs, SafeSpaceVR, Sitefinity Cloud, Sitefinity CMS, Sitefinity Digital Experience Cloud, Sitefinity Feather, Sitefinity Thunder, SmartBrowser, SmartComponent, SmartDataBrowser, SmartDataObjects, SmartDataView, SmartDialog, SmartFolder, SmartFrame, SmartObjects, SmartPanel, SmartQuery, SmartViewer, SmartWindow, Supermarket, SupportLink, Unite UX, and WebClient are trademarks or service marks of Progress Software Corporation and/or its subsidiaries or affiliates in the U.S. and other countries. Java is a registered trademark of Oracle and/or its affiliates. Any other marks contained herein may be trademarks of their respective owners.

Please refer to the NOTICE.txt or Release Notes – Third-Party Acknowledgements file applicable to a particular Progress product/hosted service offering release for any related required third-party acknowledgements.

© 2022 Progress Software Corporation and/or one of its subsidiaries or affiliates. All rights reserved.

Table of Contents

1 Introduction **5**

1.1 Document Purpose 5

Intended Audience 5

2 Template **6**

3 Architecture **7**

3.1 Parallels RAS Roles 9

3.1.1 Load Balancing the RAS HTML5 Web Portal 9

3.1.2 Load Balancing the Secure Gateway Service 9

4 Enable Subnet Originating Requests Globally **10**

5 Parallels Configuration **11**

5.1 Secure Gateway Prerequisites 11

5.2 Configure the RAS HTML5 Portal 12

6 Virtual Service - RAS Secure Gateway **14**

6.1 Create the RAS Secure Gateway - HTTP Virtual Services 14

6.1.1 Parallels RAS Secure Gateway - HTTP Virtual Service Recommended API Settings (optional) 15

6.2 Create the RAS Secure Gateway - HTTPS Virtual Services 15

6.2.1 Parallels RAS Secure Gateway - HTTPS Virtual Service Recommended API Settings (optional) 16

6.3 Create the RAS Secure Gateway - UDP Virtual Services 17

6.3.1 Parallels RAS Secure Gateway - UDP Virtual Service Recommended API Settings (optional) 17

© 2022 Progress Software Corporation and/or one of its subsidiaries or affiliates. All rights reserved.

7 Testing 19

Last Updated Date 21

© 2022 Progress Software Corporation and/or one of its subsidiaries or affiliates. All rights reserved.

1 Introduction

Parallels RAS (Remote Application Server) is a cost-effective application delivery and Virtual Desktop Infrastructure (VDI) solution that allows your employees and customers to access and use applications, desktops, and data from any device. Easy to deploy, configure, and maintain, Parallels RAS provides organizations of any size with a seamless application delivery and VDI experience - while reducing Total Cost of Ownership (TCO) and improving security.

The Kemp Support Team is available to provide solutions for scenarios not explicitly defined in this guide.

The Kemp support site can be found at: https://support.kemptechnologies.com.

1.1 Document Purpose

This document provides the recommended LoadMaster settings used when load balancing Parallels RAS.

Intended Audience

Anyone who is interested in configuring the LoadMaster to optimize Parallels RAS.

© 2022 Progress Software Corporation and/or one of its subsidiaries or affiliates. All rights reserved.

2 Template

Kemp has developed a template containing our recommended settings for this workload. You can install this template to help create Virtual Services (VSs) because it automatically populates the settings. You can use the template to easily create the required VSs with the recommended settings. For some workloads, additional manual steps may be required such as assigning a certificate or applying port following. These steps are covered in the document, if needed.

You can remove templates after use and this will not affect deployed services. If needed, you can make changes to any of the VS settings after using the template.

Download released templates from the following page: LoadMaster Templates.

For more information and steps on how to import and use templates, refer to the Virtual Services and Templates, Feature Description on the Kemp Documentation page.

© 2022 Progress Software Corporation and/or one of its subsidiaries or affiliates. All rights reserved.

3 Architecture

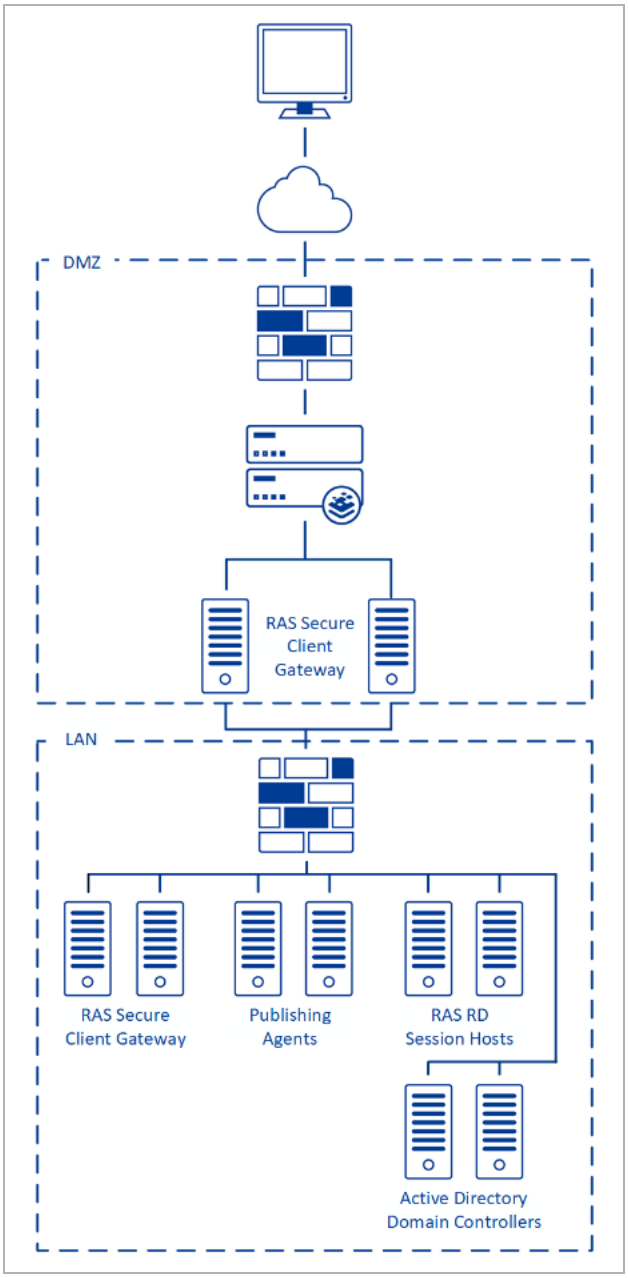

The diagram above shows a scenario where the Kemp LoadMaster can be used to load balance the RAS Secure Gateway service in forwarding mode. In this configuration, the Secure Gateway is

© 2022 Progress Software Corporation and/or one of its subsidiaries or affiliates. All rights reserved.

deployed in the DMZ and is load balanced by the LoadMaster. The RAS Secure Gateways forward to the internal Secure Gateways in a cascaded chain. If your configuration differs from this configuration and there are issues deploying the LoadMaster, contact the local Kemp Support Team for assistance: http://kemptechnologies.com/load-balancing-support/kemp-support

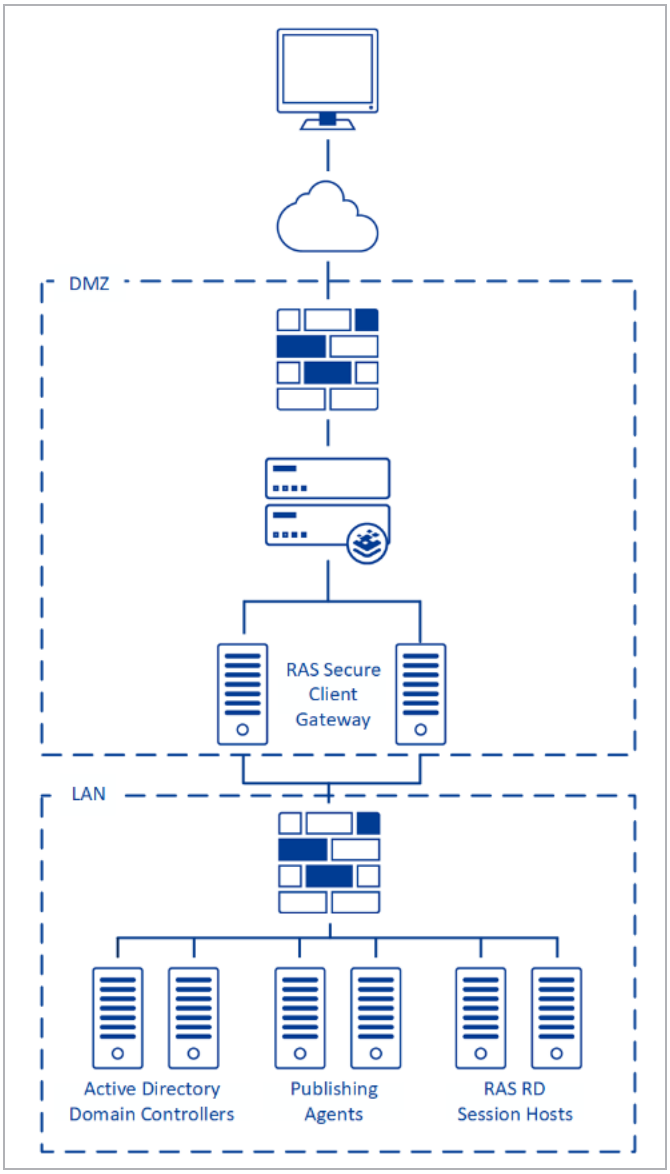

The diagram above shows a different scenario where the LoadMaster is used to load balance RAS Secure Gateways. In this configuration, the Secure Gateways (and HTML5 Portal) are deployed in the DMZ with no Secure Gateways in the corporate network. Additional ports such as 3389 must be opened on the internal firewall from the DMZ to the corporate network. If your configuration differs

© 2022 Progress Software Corporation and/or one of its subsidiaries or affiliates. All rights reserved.

from this configuration and there are issues deploying the LoadMaster, contact the local Kemp Support Team for assistance: http://kemptechnologies.com/load-balancing-support/kemp-support

3.1 Parallels RAS Roles

Parallels RAS consists of various roles. You can configure the LoadMaster to load balance some of these roles. The sections below discuss the various scenarios in which you can use the LoadMaster to load balance Parallels RAS.

3.1.1 Load Balancing the RAS HTML5 Web Portal

The RAS HTML5 Web Portal is a web application that acts as a web-based portal to an RAS farm. It provides users with a list of available applications and desktops using their web browser.

The RAS HTML5 Web Portal role is part of the Secure Gateway Role. By default, it is enabled when configuring a Secure Gateway Sever.

3.1.2 Load Balancing the Secure Gateway Service

The RAS Secure Gateway Service is an SSL gateway that simplifies the deployment of applications over the Internet. The Secure Gateway Service allows access to published applications and desktops securely through SSL connections.

The RAS Secure Gateway Service provides a proxy connection to RAS components such as RDP Sessions and the HTML5 Web Portal.

© 2022 Progress Software Corporation and/or one of its subsidiaries or affiliates. All rights reserved.

4 Enable Subnet Originating Requests Globally

It is best practice to enable the **Subnet Originating Requests** option globally.

In a one-armed setup (where the Virtual Service and Real Servers are on the same network/subnet) **Subnet Originating Requests** is usually not needed. However, enabling **Subnet Originating Requests** should not affect the routing in a one-armed setup.

In a two-armed setup where the Virtual Service is on network/subnet A, for example, and the Real Servers are on network B, **Subnet Originating Requests** should be enabled on LoadMasters with firmware version 7.1-16 and above.



When **Subnet Originating Requests** is enabled, the Real Server sees traffic originating from 10.20.20.21 (LoadMaster eth1 address) and responds correctly in most scenarios.

With **Subnet Originating Requests** disabled, the Real Server sees traffic originating from 10.0.0.15 (LoadMaster Virtual Service address on **eth0**) and responds to **eth0** which could cause asymmetric routing.

When **Subnet Originating Requests** is enabled globally, it is automatically enabled on all Virtual Services. If the **Subnet Originating Requests** option is disabled globally, you can choose whether to enable **Subnet Originating Requests** on a per-Virtual Service basis.

To enable **Subnet Originating Requests** globally, follow the steps below:

1. In the main menu of the LoadMaster User Interface (UI), go to **System Configuration > Miscellaneous Options > Network Options**.
2. Select the **Subnet Originating Requests** check box.

© 2022 Progress Software Corporation and/or one of its subsidiaries or affiliates. All rights reserved.

5 Parallels Configuration

This document covers an example of the settings required for Parallels RAS. The RAS administrator should follow the Deployment Guide provided by Parallels to complete the configuration based on their unique topology.

The Parallels Administrators Guide can be found here:
https://download.parallels.com/ras/v17/docs/en_US/Parallels-RAS-v17-Administrators-Guide/39932.htm

5.1 Secure Gateway Prerequisites

Before adding Virtual Services to the LoadMaster, ensure to have the DNS names and IP addresses available for all Secure Access Service roles in your deployment. The DNS Names used must be included in the certificate that will be used to secure the traffic.

1. On each of the Secure Gateway Servers, right click and choose properties.

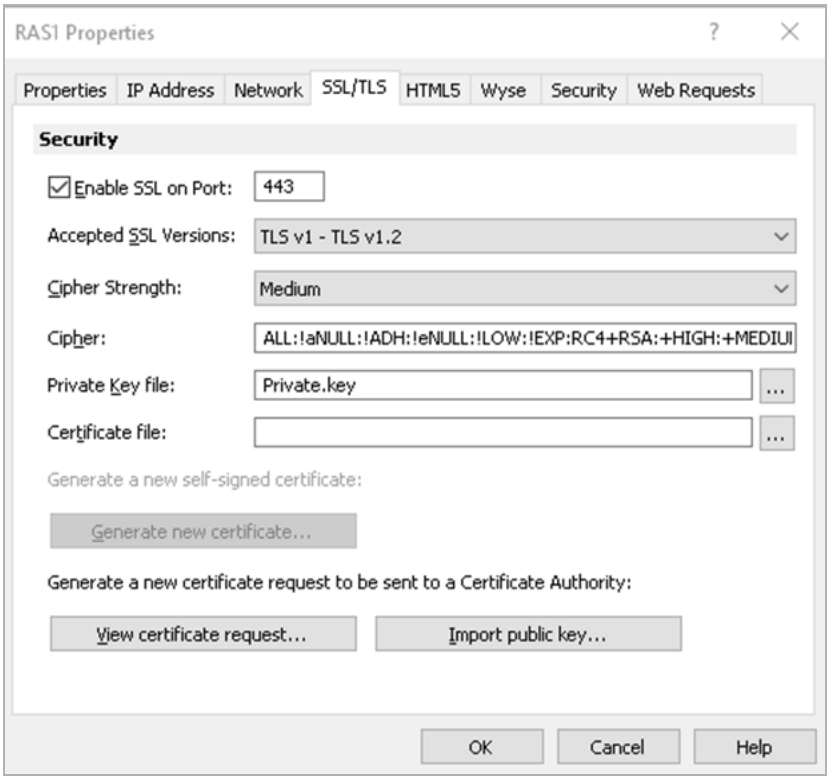

2. Under the properties of the Secure Gateway, configure the following settings:

© 2022 Progress Software Corporation and/or one of its subsidiaries or affiliates. All rights reserved.

a) In the **SSL/TLS** tab, select the **Enable SSL on Port** check box.

b) Enter **443** as the port.

c) Import or generate the SSL certificate to be used to encrypt traffic.

5.2 Configure the RAS HTML5 Portal

The RAS HTML5 Portal is part of the Secure Gateway service and is enabled by default. To check that it is enabled and view the properties, go to the gateways section in the RAS console.

1. Log in to the RAS console and go to **Farm > Gateways**.

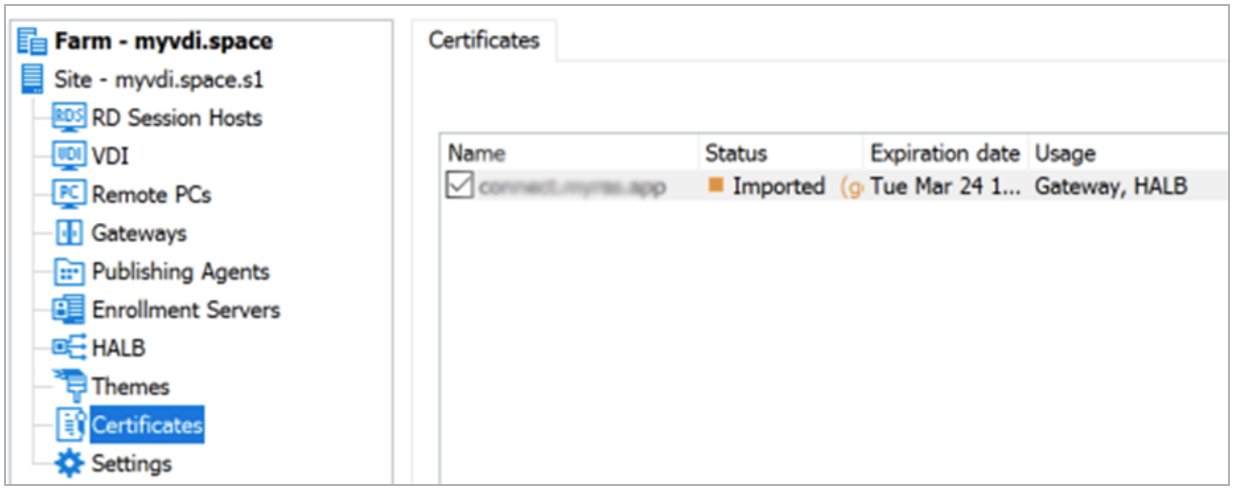

2. On each of the Secure Gateway Servers, right-click and choose **Properties**.

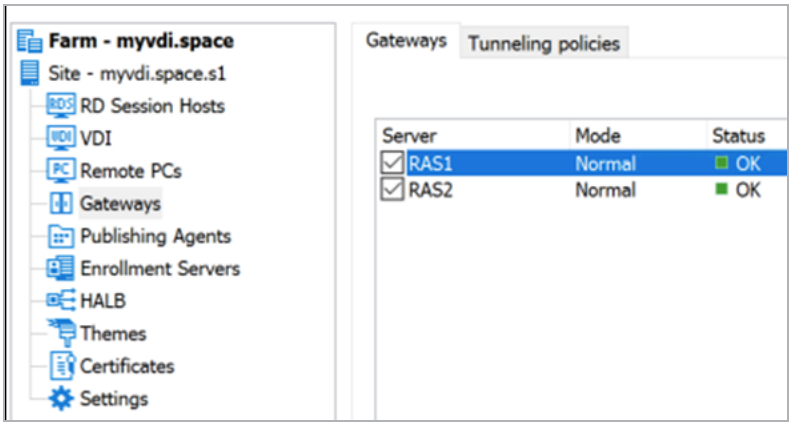

3. On the **HTML5** tab, select the **Enable HTML5 Client** check box.

© 2022 Progress Software Corporation and/or one of its subsidiaries or affiliates. All rights reserved.

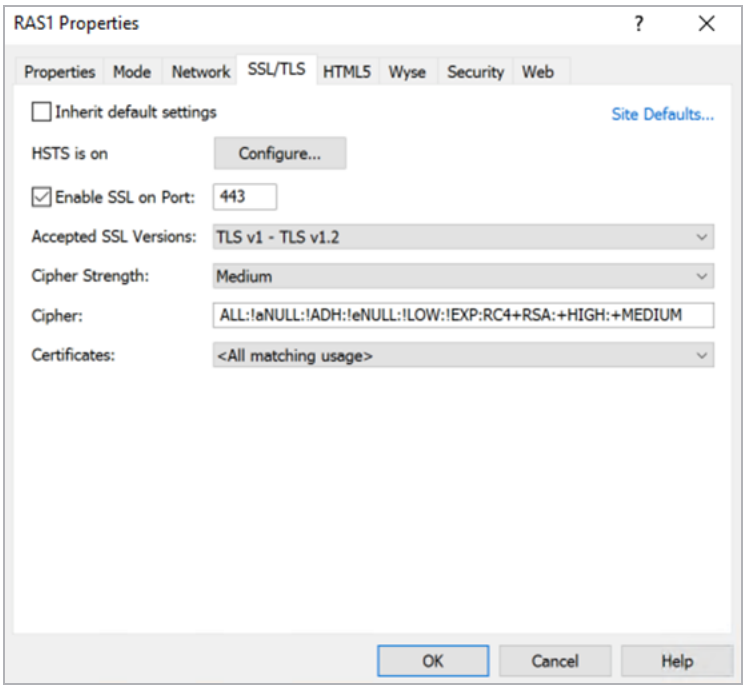

4. Then on the **SSL/TLS** tab, select **<All matching usage>** or the certificate name.
5. Click **OK** to confirm.

© 2022 Progress Software Corporation and/or one of its subsidiaries or affiliates. All rights reserved.

6 Virtual Service - RAS Secure Gateway

Refer to the sections below for details on the RAS Secure Gateway Virtual Service.

6.1 Create the RAS Secure Gateway - HTTP Virtual Services

The following are the steps and recommended settings to configure the Parallels RAS Secure Gateway HTTP Virtual Service:

1. In the main menu of the LoadMaster Web User Interface (WUI), go to **Virtual Services > Add New**.

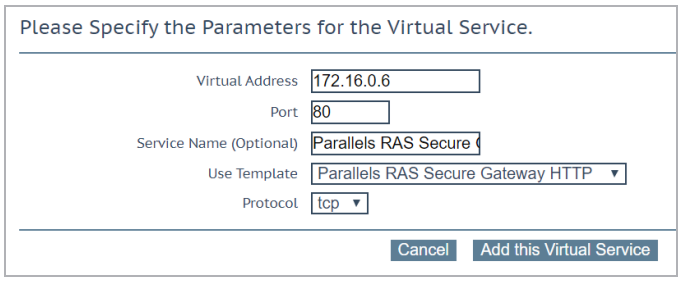

2. Type a valid **Virtual Address**.

3. Select the **Parallels RAS Secure Gateway - HTTP** template in the **Use Template** drop-down list.

4. Click **Add this Virtual Service**.

5. Expand the **Real Servers** section.

6. Click **Add New**.

7. Type the **Real Server Address**.

8. Confirm that port **80** is entered.

9. Click **Add This Real Server**.

10. Repeat the steps above to add more Real Servers as needed.

© 2022 Progress Software Corporation and/or one of its subsidiaries or affiliates. All rights reserved.

6.1.1 Parallels RAS Secure Gateway - HTTP Virtual Service Recommended API Settings (optional)

This table outlines the Application Programming Interface (API) parameters and values set using the Kemp application template. You can use these settings with scripts and automation tools.

API Parameter	API Value
port	80
prot	tcp
VStype	http
SubnetOriginating	1
Forcel7	1
Transparent	0
Schedule	lc
Persist	src
PersistTimeout	360
CheckType	tcp
CheckPort	80

6.2 Create the RAS Secure Gateway - HTTPS Virtual Services

The following are the steps involved and the recommended settings to configure the Parallels RAS Secure Gateway HTTPS Virtual Service:

1. In the main menu of the LoadMaster WUI, go to **Virtual Services > Add New**.

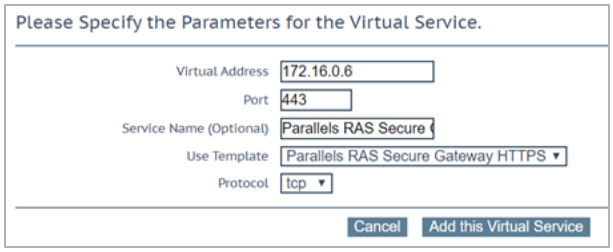

2. Type a valid **Virtual Address**.

© 2022 Progress Software Corporation and/or one of its subsidiaries or affiliates. All rights reserved.

3. Select the **Parallels RAS Secure Gateway - HTTPS** template in the **Use Template** drop-down list.
4. Click **Add this Virtual Service**.
5. Expand the **Real Servers** section.
6. Click **Add New**.
7. Type the **Real Server Address**.
8. Confirm that port **443** is entered.
9. Click **Add This Real Server**.
10. Repeat the steps above to add more Real Servers as needed.

6.2.1 Parallels RAS Secure Gateway - HTTPS Virtual Service Recommended API Settings (optional)

This table outlines the API parameters and values set using the Kemp application template. You can use these settings with scripts and automation tools.

API Parameter	API Value
port	443
prot	tcp
VStype	http
SubnetOriginating	1
Forcel7	1
Transparent	0
Schedule	lc
Persist	src
PersistTimeout	360
CheckType	tcp
CheckPort	443

© 2022 Progress Software Corporation and/or one of its subsidiaries or affiliates. All rights reserved.

6.3 Create the RAS Secure Gateway - UDP Virtual Services

The following are the steps involved and the recommended settings to configure the Parallels RAS Secure Gateway UDP (RAS RDP Proxy) Virtual Service:

1. In the main menu of the LoadMaster WUI, go to **Virtual Services > Add New**.

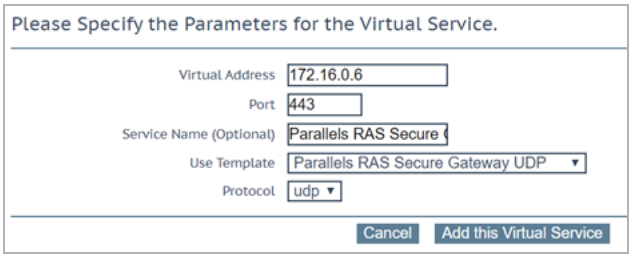

2. Type a valid **Virtual Address**.
3. Select the **Parallels RAS Secure Gateway - UDP** template in the **Use Template** drop-down list.
4. Click **Add this Virtual Service**.
5. Expand the **Real Servers** section.
6. Click **Add New**.
7. Type the **Real Server Address**.
8. Confirm that port **443** is entered.
9. Click **Add This Real Server**.
10. Repeat the steps above to add more Real Servers as needed.

6.3.1 Parallels RAS Secure Gateway - UDP Virtual Service Recommended API Settings (optional)

This table outlines the API parameters and values set using the Kemp application template. You can use these settings with scripts and automation tools.

API Parameter	API Value
port	443
prot	udp

© 2022 Progress Software Corporation and/or one of its subsidiaries or affiliates. All rights reserved.

API Parameter	API Value
SubnetOriginating	1
Forcel7	1
Transparent	0
Schedule	lc
Persist	src
PersistTimeout	360
CheckType	icmp

© 2022 Progress Software Corporation and/or one of its subsidiaries or affiliates. All rights reserved.

7 Testing

After following the implementation steps in the previous section, follow the steps below to test the load-balanced Parallels RAS environment:

1. Configure your DNS to resolve to the Virtual Service Virtual IP address. In this example, **connect.kempdemo.com** would resolve to **172.16.0.6**.

> This DNS entry would also match your SSL certificate common name.

2. Open a web browser that can reach the load-balanced IP.

3. Browse to the configured DNS name for the load-balanced service, for example **http://connect.kempdemo.com/** which will redirect to **https://connect.kempdemo.com/RASHTML5Gateway/** . A web page should be presented with the RAS login page. This indicates that the LoadMaster has redirected the session to a Real Server.

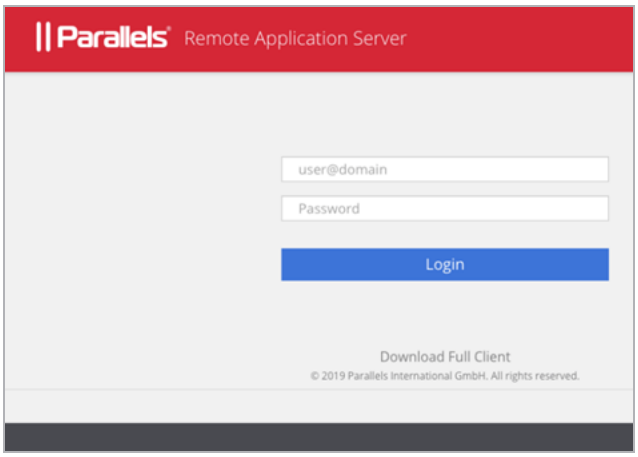

4. Enter a username and password with permissions to access the Parallels RAS environment.

5. In the LoadMaster WUI, go to **Statistics > Real Time Statistics**.

6. Click **Real Servers**.

© 2022 Progress Software Corporation and/or one of its subsidiaries or affiliates. All rights reserved.

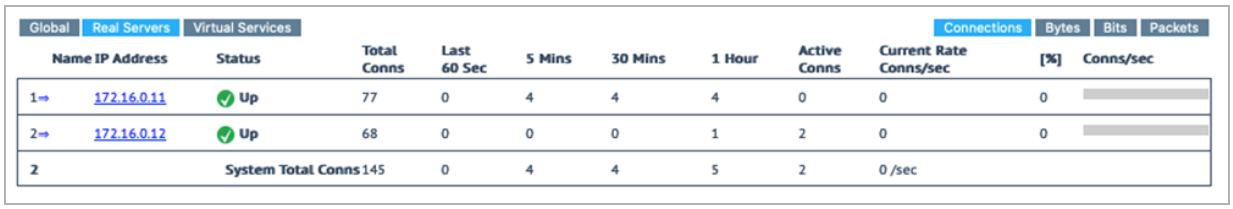

Global | Real Servers | Virtual Services — Connections | Bytes | Bits | Packets

Name	IP Address	Status	Total Conns	Last 60 Sec	5 Mins	30 Mins	1 Hour	Active Conns	Current Rate Conns/sec	[%]	Conns/sec
1⇒	172.16.0.11	Up	77	0	4	4	4	0	0	0	
2⇒	172.16.0.12	Up	68	0	0	0	1	2	0	0	
2		System Total Conns	145	0	4	4	5	2	0 /sec		

This overview shows the active sessions, sessions over the last hour, in addition to how many requests each Real Server handled.

6. Open another web browser on a different client and perform the first three steps above.

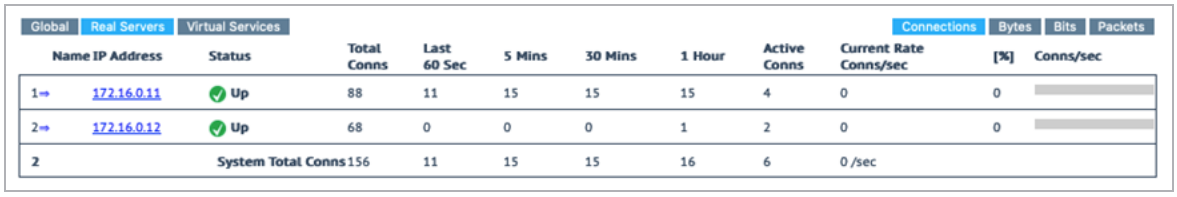

Global | Real Servers | Virtual Services — Connections | Bytes | Bits | Packets

Name	IP Address	Status	Total Conns	Last 60 Sec	5 Mins	30 Mins	1 Hour	Active Conns	Current Rate Conns/sec	[%]	Conns/sec
1⇒	172.16.0.11	Up	88	11	15	15	15	4	0	0	
2⇒	172.16.0.12	Up	68	0	0	0	1	2	0	0	
2		System Total Conns	156	11	15	15	16	6	0 /sec		

7. Refresh the LoadMaster statistics page. Notice that, based on the load balancing method we chose, load is spread over both Secure Access Servers (172.16.0.11 and 172.16.0.12).

© 2022 Progress Software Corporation and/or one of its subsidiaries or affiliates. All rights reserved.

Last Updated Date

This document was last updated on 27 July 2023.

© 2022 Progress Software Corporation and/or one of its subsidiaries or affiliates. All rights reserved.