

JBoss

Deployment Guide

UPDATED: 28 July 2023

© 2022 Progress Software Corporation and/or one of its subsidiaries or affiliates. All rights reserved.

These materials and all Progress® software products are copyrighted and all rights are reserved by Progress Software Corporation. The information in these materials is subject to change without notice, and Progress Software Corporation assumes no responsibility for any errors that may appear therein. The references in these materials to specific platforms supported are subject to change.

#1 Load Balancer in Price/Performance, 360 Central, 360 Vision, Chef, Chef (and design), Chef Habitat, Chef Infra, Code Can (and design), Compliance at Velocity, Corticon, Corticon.js, DataDirect (and design), DataDirect Cloud, DataDirect Connect, DataDirect Connect64, DataDirect XML Converters, DataDirect XQuery, DataRPM, Defrag This, Deliver More Than Expected, DevReach (and design), Driving Network Visibility, Flowmon, Inspec, Ipswitch, iMacros, K (stylized), Kemp, Kemp (and design), Kendo UI, Kinvey, LoadMaster, MessageWay, MOVEit, NativeChat, OpenEdge, Powered by Chef, Powered by Progress, Progress, Progress Software Developers Network, SequeLink, Sitefinity (and Design), Sitefinity, Sitefinity (and design), Sitefinity Insight, SpeedScript, Stylized Design (Arrow/3D Box logo), Stylized Design (C Chef logo), Stylized Design of Samurai, TeamPulse, Telerik, Telerik (and design), Test Studio, WebSpeed, WhatsConfigured, WhatsConnected, WhatsUp, and WS_FTP are registered trademarks of Progress Software Corporation or one of its affiliates or subsidiaries in the U.S. and/or other countries.

Analytics360, AppServer, BusinessEdge, Chef Automate, Chef Compliance, Chef Desktop, Chef Workstation, Corticon Rules, Data Access, DataDirect Autonomous REST Connector, DataDirect Spy, DevCraft, Fiddler, Fiddler Classic, Fiddler Everywhere, Fiddler Jam, FiddlerCap, FiddlerCore, FiddlerScript, Hybrid Data Pipeline, iMail, InstaRelinker, JustAssembly, JustDecompile, JustMock, KendoReact, OpenAccess, PASOE, Pro2, ProDataSet, Progress Results, Progress Software, ProVision, PSE Pro, Push Jobs, SafeSpaceVR, Sitefinity Cloud, Sitefinity CMS, Sitefinity Digital Experience Cloud, Sitefinity Feather, Sitefinity Thunder, SmartBrowser, SmartComponent, SmartDataBrowser, SmartDataObjects, SmartDataView, SmartDialog, SmartFolder, SmartFrame, SmartObjects, SmartPanel, SmartQuery, SmartViewer, SmartWindow, Supermarket, SupportLink, Unite UX, and WebClient are trademarks or service marks of Progress Software Corporation and/or its subsidiaries or affiliates in the U.S. and other countries. Java is a registered trademark of Oracle and/or its affiliates. Any other marks contained herein may be trademarks of their respective owners.

Please refer to the NOTICE.txt or Release Notes – Third-Party Acknowledgements file applicable to a particular Progress product/hosted service offering release for any related required third-party acknowledgements.

© 2022 Progress Software Corporation and/or one of its subsidiaries or affiliates. All rights reserved.

Table of Contents

1 Introduction **4**

1.1 Document Purpose 4

1.2 Intended Audience 4

2 Template **5**

3 Architecture **6**

4 Configure the LoadMaster **7**

4.1 Enable Subnet Originating Requests Globally 7

4.2 Enable Check Persist Globally 8

4.3 Create the JBoss Virtual Services 8

4.3.1 Create a JBoss Web App HTTP Virtual Service 8

4.3.2 Create a JBoss Web App HTTPS Offloaded Virtual Service 9

4.3.2.1 Create a JBoss Web App HTTPS Offloaded HTTP Redirect Virtual Service 11

4.3.3 Create a JBoss Web App HTTPS Reencrypted Virtual Service 11

4.3.3.1 Create a JBoss Web App HTTPS Reencrypted Redirect Virtual Service 13

4.3.4 Create a JBoss Web App HTTPS Straight Through Virtual Service 13

4.3.4.1 Create a JBoss Web App HTTPS Straight Through HTTP Redirect Virtual Service 14

References **15**

Last Updated Date **16**

© 2022 Progress Software Corporation and/or one of its subsidiaries or affiliates. All rights reserved.

1 Introduction

JBoss is an application server authored by JBoss, which is now developed by Red Hat. It was renamed WildFly in November 2014. It is written in Java and implements the Java Platform, Enterprise Edition (Java EE) specification. It runs on multiple platforms and is open source.

The Kemp LoadMaster is used to load balance the JBoss workload. The LoadMaster offers advanced Layer 4 and Layer 7 server load balancing, SSL Acceleration and a multitude of other advanced Application Delivery Controller (ADC) features. The LoadMaster intelligently and efficiently distributes user traffic among the application servers so that users get the best experience possible.

1.1 Document Purpose

This document provides the recommended LoadMaster settings used when load balancing the JBoss workload. The Kemp Support Team is available to provide solutions for scenarios not explicitly defined. The Kemp support site can be found at: https://support.kemptechnologies.com

1.2 Intended Audience

This document is intended to be read by anyone who is interested in configuring the LoadMaster to optimize JBoss Application Server.

© 2022 Progress Software Corporation and/or one of its subsidiaries or affiliates. All rights reserved.

2 Template

Kemp has developed a template containing our recommended settings for this workload. You can install this template to help create Virtual Services (VSs) because it automatically populates the settings. You can use the template to easily create the required VSs with the recommended settings. For some workloads, additional manual steps may be required such as assigning a certificate or applying port following, these steps are covered in the document, if needed.

You can remove templates after use and this will not affect deployed services. If needed, you can make changes to any of the VS settings after using the template.

Download released templates from the following page: LoadMaster Templates.

For more information and steps on how to import and use templates, refer to the Virtual Services and Templates, Feature Description on the Kemp Documentation page.

© 2022 Progress Software Corporation and/or one of its subsidiaries or affiliates. All rights reserved.

3 Architecture

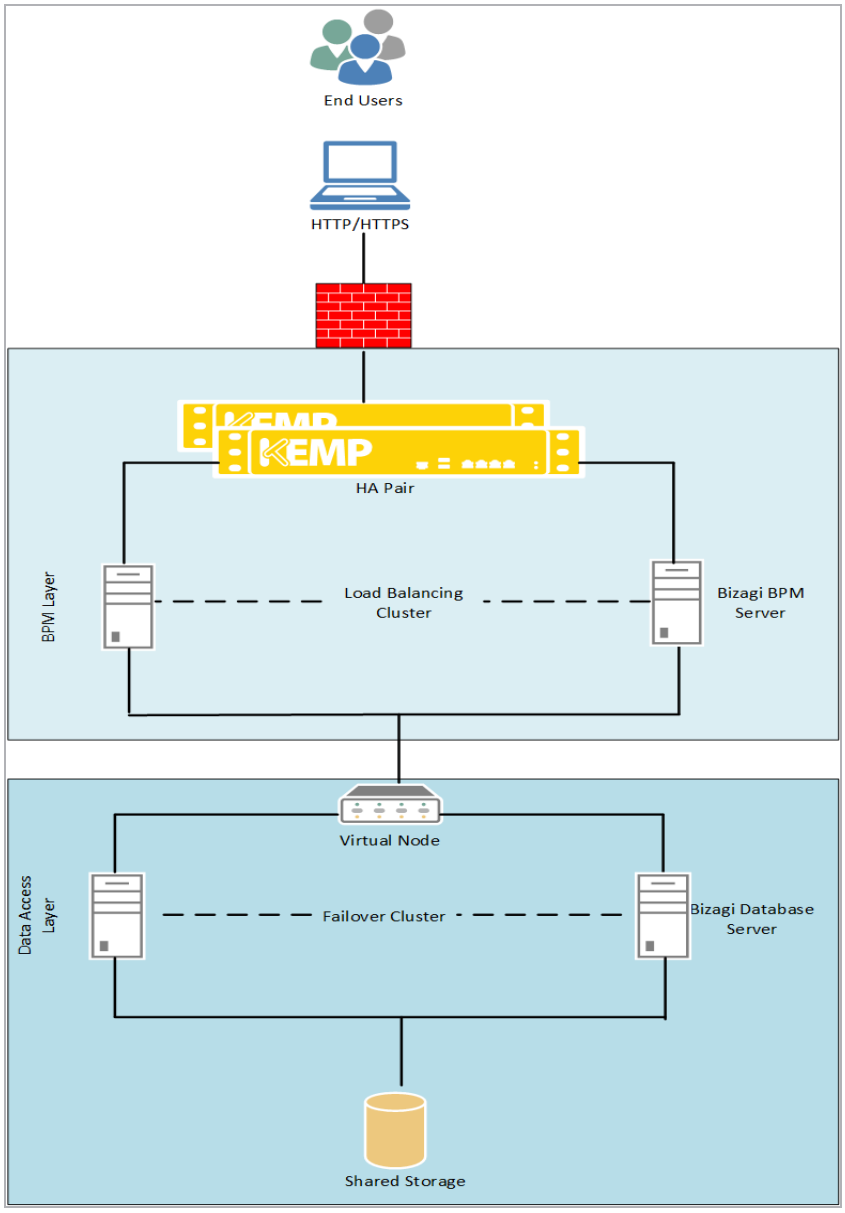

© 2022 Progress Software Corporation and/or one of its subsidiaries or affiliates. All rights reserved.

4 Configure the LoadMaster

The deployed JBoss environment determines which of the following setups is used.

4.1 Enable Subnet Originating Requests Globally

It is best practice to enable the **Subnet Originating Requests** option globally.

In a one-armed setup (where the Virtual Service and Real Servers are on the same network/subnet) **Subnet Originating Requests** is usually not needed. However, enabling **Subnet Originating Requests** should not affect the routing in a one-armed setup.

In a two-armed setup where the Virtual Service is on network/subnet A, for example, and the Real Servers are on network B, **Subnet Originating Requests** should be enabled on LoadMasters with firmware version 7.1-16 and above.



When **Subnet Originating Requests** is enabled, the Real Server sees traffic originating from 10.20.20.21 (LoadMaster eth1 address) and responds correctly in most scenarios.

With **Subnet Originating Requests** disabled, the Real Server sees traffic originating from 10.0.0.15 (LoadMaster Virtual Service address on **eth0**) and responds to **eth0** which could cause asymmetric routing.

When **Subnet Originating Requests** is enabled globally, it is automatically enabled on all Virtual Services. If the **Subnet Originating Requests** option is disabled globally, you can choose whether to enable **Subnet Originating Requests** on a per-Virtual Service basis.

To enable **Subnet Originating Requests** globally, follow the steps below:

1. In the main menu of the LoadMaster User Interface (UI), go to **System Configuration > Miscellaneous Options > Network Options**.
2. Select the **Subnet Originating Requests** check box.

© 2022 Progress Software Corporation and/or one of its subsidiaries or affiliates. All rights reserved.

4.2 Enable Check Persist Globally

It is recommended that you change the **Always Check Persist** option to **Yes – Accept Changes**. Use the following steps:

1. Go to **System Configuration > Miscellaneous Options > L7 Configuration**.
2. Click the **Always Check Persist** drop-down arrow and select **Yes – Accept Changes**.

4.3 Create the JBoss Virtual Services

The following sections describe the recommended settings for the JBoss Virtual Services.

4.3.1 Create a JBoss Web App HTTP Virtual Service

The following are the steps involved and the recommended settings to configure the JBoss Web App HTTP Virtual Service:

1. In the main menu of the LoadMaster Web User Interface (WUI), go to **Virtual Services > Add New**.

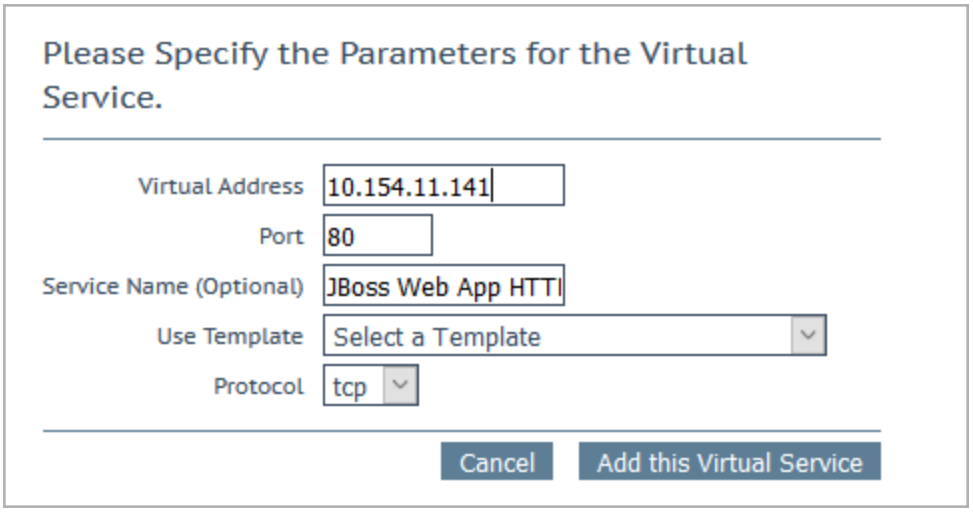

2. Enter a valid **Virtual Address**.
3. Enter **80** as the **Port**.
4. Enter a recognizable **Service Name**, such as **JBoss Web App HTTP**.
5. Click **Add this Virtual Service**.
6. Configure the settings as recommended in the following table:

© 2022 Progress Software Corporation and/or one of its subsidiaries or affiliates. All rights reserved.

Section	Option	Value	Comment
Standard Options	Persistence Mode	Source IP Address	
	Timeout	1 Hour	
	Scheduling Method	least connection	
	Idle Connection Timeout	660 (seconds)	Click Set Idle Timeout.
Real Servers	Checked Port	8080	

7. Add the Real Servers:

   a) Expand the **Real Servers** section.

   b) Click **Add New**.

   c) Enter the address of the relevant real server.

   d) Complete the other fields as required.

   e) Click **Add this Real Server** then click **OK** to the pop-up message.

   f) Repeat the steps above to add more Real Servers as needed, based on your environment.

4.3.2 Create a JBoss Web App HTTPS Offloaded Virtual Service

The following are the steps involved and the recommended settings to configure the JBoss Web App HTTPS Offloaded Virtual Service:

1. In the main menu of the LoadMaster WUI, go to **Virtual Services > Add New**.

© 2022 Progress Software Corporation and/or one of its subsidiaries or affiliates. All rights reserved.

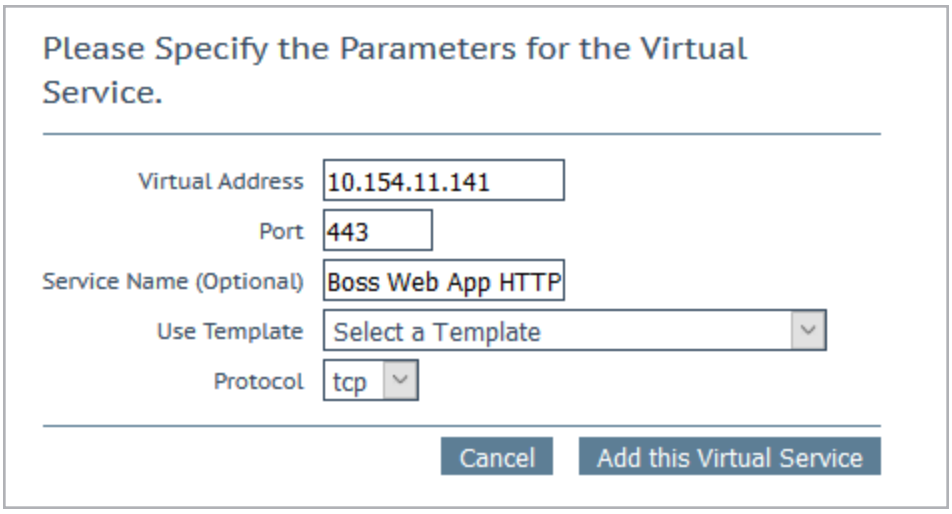

2. Enter a valid **Virtual Address**.
3. Enter **443** as the **Port**.
4. Enter a recognizable Service Name, such as JBoss Web App HTTPS Offloaded.
5. Click **Add this Virtual Service**.
6. Configure the settings as recommended in the following table:

Section	Option	Value	Comment
Standard Options	Persistence Mode	Source IP Address	
	Timeout	1 Hour	
	Scheduling Method	least connection	
	Idle Connection Timeout	660 (seconds)	Click Set Idle Timeout.
SSL Properties	SSL Acceleration	Enabled	
	Cipher Set	BestPractices	
Advanced Properties	Add a Port 80 Redirector VS	https://%h%s	Click the **Add HTTP Redirector** button. This automatically creates a redirect on port 80.
Real Servers	Checked Port	8080	

© 2022 Progress Software Corporation and/or one of its subsidiaries or affiliates. All rights reserved.

7. Add the Real Servers:

    a) Expand the **Real Servers** section.

    b) Click **Add New**.

    c) Enter the address of the relevant Real Server.

    d) Complete the other fields as required.

    e) Click **Add this Real Server** then click **OK** to the pop-up message.

    f) Repeat the steps above to add more Real Servers as needed, based on your environment.

4.3.2.1 Create a JBoss Web App HTTPS Offloaded HTTP Redirect Virtual Service

Clicking the **Add HTTP Redirector** button automatically creates a port 80 redirect Virtual Service. This is optional, but the purpose of this Virtual Service is to redirect any clients who have connected using HTTP to the HTTPS Virtual Service. Kemp also recommends changing the **Persistence Mode** to **None**.

4.3.3 Create a JBoss Web App HTTPS Reencrypted Virtual Service

The following are the steps involved and the recommended settings to configure the JBoss Web App HTTPS Reencrypted Virtual Service:

1. In the main menu of the LoadMaster WUI, go to **Virtual Services > Add New**.

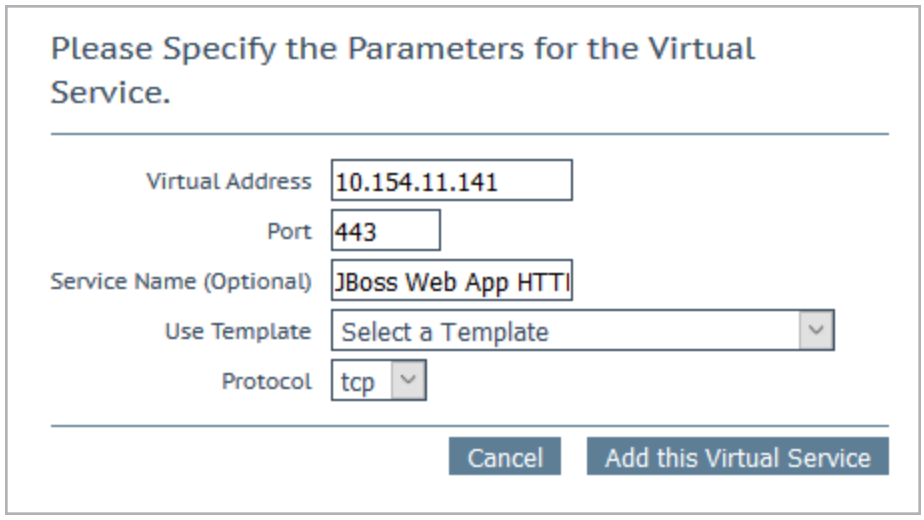

2. Enter a valid **Virtual Address**.

3. Enter **443** as the **Port**.

© 2022 Progress Software Corporation and/or one of its subsidiaries or affiliates. All rights reserved.

4. Enter a recognizable Service Name, such as JBoss Web App HTTPS Reencrypted.

5. Click **Add this Virtual Service**.

6. Configure the settings as recommended in the following table:

Section	Option	Value	Comment
Standard Options	Persistence Mode	Source IP Address	
	Timeout	1 Hour	
	Scheduling Method	least connection	
	Idle Connection Timeout	660 (seconds)	Click Set Idle Timeout.
SSL Properties	SSL Acceleration	Enabled	
	Reencrypt	Enabled	
	Cipher Set	Best Practices	
Advanced Properties	Add a Port 80 redirector VS	https://%h%s	Click the **Add HTTP Redirector** button. This automatically creates a redirect on port 80.
Real Servers	Checked Port	8443	

7. Add the Real Servers:

   a) Expand the **Real Servers** section.

   b) Click **Add New**.

   c) Enter the address of the relevant Real Server.

   d) Complete the other fields as required.

   e) Click **Add this Real Server** then click **OK** to the pop-up message.

   f) Repeat the steps above to add more Real Servers as needed, based on your environment.

© 2022 Progress Software Corporation and/or one of its subsidiaries or affiliates. All rights reserved.

4.3.3.1 Create a JBoss Web App HTTPS Reencrypted Redirect Virtual Service

Clicking the **Add HTTP Redirector** button automatically creates a port 80 redirect Virtual Service. This is optional, but the purpose of this Virtual Service is to redirect any clients who have connected using HTTP to the HTTPS Virtual Service. Kemp also recommends changing the **Persistence Mode** to **None**.

4.3.4 Create a JBoss Web App HTTPS Straight Through Virtual Service

The following are the steps involved and the recommended settings to configure the JBoss Web App HTTPS straight through Virtual Service:

1. In the main menu of the LoadMaster WUI, go to **Virtual Services > Add New**.

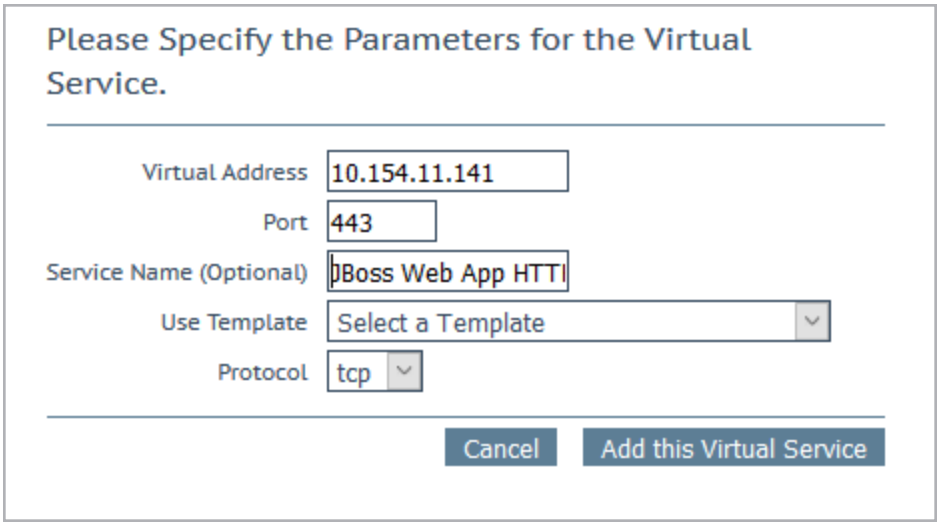

2. Enter a valid **Virtual Address**.
3. Enter **443** as the **Port**.
4. Enter a recognizable Service Name, such as JBoss Web App HTTPS straight through.
5. Click Add this Virtual Service.
6. Configure the settings as recommended in the following table:

Section	Option	Value	Comment
Standard Options	Persistence Mode	Source IP Address	
	Timeout	1 Hour	

© 2022 Progress Software Corporation and/or one of its subsidiaries or affiliates. All rights reserved.

Section	Option	Value	Comment
	Scheduling Method	least connection	
	Idle Connection Timeout	660	Click Set Idle Timeout.
Advanced Properties	Add a Port 80 Redirector VS		Click the **Add HTTP Redirector** button. This automatically creates a redirect on port 80.
Real Servers	Checked Port	8443	

7. Add the Real Servers:

   a) Expand the **Real Servers** section.

   b) Click **Add New**.

   c) Enter the address of the relevant Real Server.

   d) Complete the other fields as required.

   e) Click **Add this Real Server** then click **OK** to the pop-up message.

   f) Repeat the steps above to add more Real Servers as needed, based on your environment.

4.3.4.1 Create a JBoss Web App HTTPS Straight Through HTTP Redirect Virtual Service

Clicking the **Add HTTP Redirector** button automatically creates a port 80 redirect Virtual Service. This is optional, but the purpose of this Virtual Service is to redirect any clients who have connected using HTTP to the HTTPS Virtual Service. Kemp also recommends changing the **Persistence Mode** to **None**.

© 2022 Progress Software Corporation and/or one of its subsidiaries or affiliates. All rights reserved.

References

Unless otherwise specified, the following documents can be found at http://kemptechnologies.com/documentation.

Virtual Services and Templates, Feature Description

© 2022 Progress Software Corporation and/or one of its subsidiaries or affiliates. All rights reserved.

Last Updated Date

This document was last updated on 28 July 2023.

© 2022 Progress Software Corporation and/or one of its subsidiaries or affiliates. All rights reserved.