

IBM Cloud Object Storage

Deployment Guide

UPDATED: 28 July 2023

© 2022 Progress Software Corporation and/or one of its subsidiaries or affiliates. All rights reserved.

These materials and all Progress® software products are copyrighted and all rights are reserved by Progress Software Corporation. The information in these materials is subject to change without notice, and Progress Software Corporation assumes no responsibility for any errors that may appear therein. The references in these materials to specific platforms supported are subject to change.

#1 Load Balancer in Price/Performance, 360 Central, 360 Vision, Chef, Chef (and design), Chef Habitat, Chef Infra, Code Can (and design), Compliance at Velocity, Corticon, Corticon.js, DataDirect (and design), DataDirect Cloud, DataDirect Connect, DataDirect Connect64, DataDirect XML Converters, DataDirect XQuery, DataRPM, Defrag This, Deliver More Than Expected, DevReach (and design), Driving Network Visibility, Flowmon, Inspec, Ipswitch, iMacros, K (stylized), Kemp, Kemp (and design), Kendo UI, Kinvey, LoadMaster, MessageWay, MOVEit, NativeChat, OpenEdge, Powered by Chef, Powered by Progress, Progress, Progress Software Developers Network, SequeLink, Sitefinity (and Design), Sitefinity, Sitefinity (and design), Sitefinity Insight, SpeedScript, Stylized Design (Arrow/3D Box logo), Stylized Design (C Chef logo), Stylized Design of Samurai, TeamPulse, Telerik, Telerik (and design), Test Studio, WebSpeed, WhatsConfigured, WhatsConnected, WhatsUp, and WS_FTP are registered trademarks of Progress Software Corporation or one of its affiliates or subsidiaries in the U.S. and/or other countries.

Analytics360, AppServer, BusinessEdge, Chef Automate, Chef Compliance, Chef Desktop, Chef Workstation, Corticon Rules, Data Access, DataDirect Autonomous REST Connector, DataDirect Spy, DevCraft, Fiddler, Fiddler Classic, Fiddler Everywhere, Fiddler Jam, FiddlerCap, FiddlerCore, FiddlerScript, Hybrid Data Pipeline, iMail, InstaRelinker, JustAssembly, JustDecompile, JustMock, KendoReact, OpenAccess, PASOE, Pro2, ProDataSet, Progress Results, Progress Software, ProVision, PSE Pro, Push Jobs, SafeSpaceVR, Sitefinity Cloud, Sitefinity CMS, Sitefinity Digital Experience Cloud, Sitefinity Feather, Sitefinity Thunder, SmartBrowser, SmartComponent, SmartDataBrowser, SmartDataObjects, SmartDataView, SmartDialog, SmartFolder, SmartFrame, SmartObjects, SmartPanel, SmartQuery, SmartViewer, SmartWindow, Supermarket, SupportLink, Unite UX, and WebClient are trademarks or service marks of Progress Software Corporation and/or its subsidiaries or affiliates in the U.S. and other countries. Java is a registered trademark of Oracle and/or its affiliates. Any other marks contained herein may be trademarks of their respective owners.

Please refer to the NOTICE.txt or Release Notes – Third-Party Acknowledgements file applicable to a particular Progress product/hosted service offering release for any related required third-party acknowledgements.

© 2022 Progress Software Corporation and/or one of its subsidiaries or affiliates. All rights reserved.

Table of Contents

1 Introduction **4**

1.1 Intended Audience 4

1.2 Document Purpose 4

2 Template **5**

3 IBM Cloud Object Storage **6**

4 LoadMaster Global Settings **7**

4.1 Enable Subnet Originating Requests Globally 7

5 LoadMaster Virtual Services **8**

5.1 Create a Virtual Service using a Template 8

5.2 IBM COS Accesser S3 Virtual Services 9

5.2.1 S3 HTTP Virtual Service Recommended API Settings (optional) 9

5.2.2 S3 HTTPS Passthrough Virtual Service Recommended API Settings (optional) 9

5.2.3 S3 HTTPS Offloaded Virtual Service Recommended API Settings (optional) 10

5.2.4 S3 HTTPS Reencrypted Virtual Service Recommended API Settings (optional) 10

6 Troubleshooting **12**

6.1 Connections Rejected 12

6.2 Source/Client IP Visibility 12

7 References **13**

Last Updated Date **14**

© 2022 Progress Software Corporation and/or one of its subsidiaries or affiliates. All rights reserved.

1 Introduction

IBM Cloud Object Storage (COS) is a software-defined, flexible, and expandable object storage solution. In combination with a Kemp load balancer, an IBM COS solution can provide object storage using the S3 protocol.

1.1 Intended Audience

Anyone interested in configuring the Kemp LoadMaster to load balance IBM COS.

1.2 Document Purpose

This deployment guide provides instructions on how to configure the Kemp LoadMaster to load balance IBM Cloud Object Storage Accesser Nodes using Kemp application templates. You should only use this guide as a reference for the load balancing configuration of COS services because each environment is unique and may have different requirements. This guide outlines the load balancing configuration using standard ports (80 and 443) in the Kemp application templates, but you can also leverage IBM COS custom ports based on the environment.

© 2022 Progress Software Corporation and/or one of its subsidiaries or affiliates. All rights reserved.

2 Template

Kemp has developed a template containing our recommended settings for this workload. You can install this template to help create Virtual Services (VSs) because it automatically populates the settings. You can use the template to easily create the required VSs with the recommended settings. For some workloads, additional manual steps may be required such as assigning a certificate or applying port following, these steps are covered in the document, if needed.

You can remove templates after use and this will not affect deployed services. If needed, you can make changes to any of the VS settings after using the template.

Download released templates from the following page: LoadMaster Templates.

For more information and steps on how to import and use templates, refer to the Virtual Services and Templates, Feature Description on the Kemp Documentation page.

© 2022 Progress Software Corporation and/or one of its subsidiaries or affiliates. All rights reserved.

3 IBM Cloud Object Storage

IBM COS is a software-defined object storage solution for large archives, media, and web data storage. Policy-driven data management allows COS to move data seamlessly between on-premises and public cloud storage to optimize availability, protection, performance, and cost.

The following table provides a list of the IBM COS Accesser default ports and protocols used for accessing the storage.

Accesser Protocols	Transport Protocol or Daemon Service	Port
S3	HTTP	80/8080
	HTTPS	443/8443

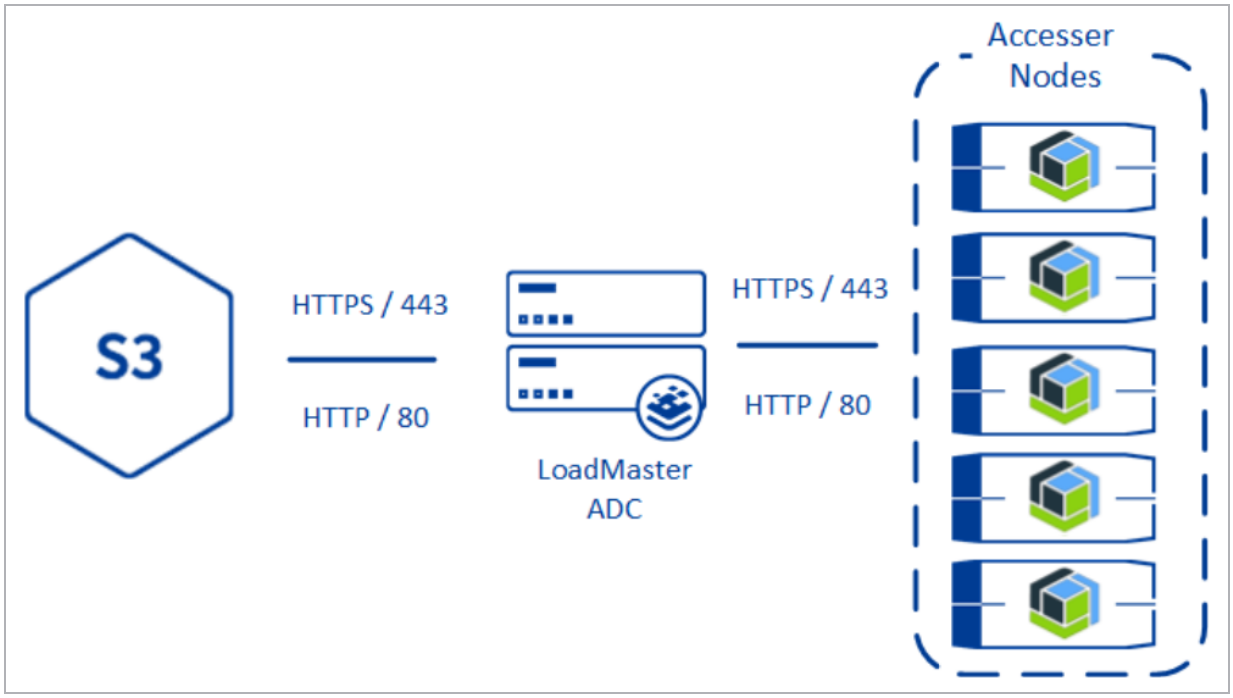

© 2022 Progress Software Corporation and/or one of its subsidiaries or affiliates. All rights reserved.

4 LoadMaster Global Settings

Before setting up the Virtual Services, you should configure the following global settings to support the workload.

4.1 Enable Subnet Originating Requests Globally

It is best practice to enable the **Subnet Originating Requests** option globally.

In a one-armed setup (where the Virtual Service and Real Servers are on the same network/subnet) **Subnet Originating Requests** is usually not needed. However, enabling **Subnet Originating Requests** should not affect the routing in a one-armed setup.

In a two-armed setup where the Virtual Service is on network/subnet A, for example, and the Real Servers are on network B, **Subnet Originating Requests** should be enabled on LoadMasters with firmware version 7.1-16 and above.



When **Subnet Originating Requests** is enabled, the Real Server sees traffic originating from 10.20.20.21 (LoadMaster eth1 address) and responds correctly in most scenarios.

With **Subnet Originating Requests** disabled, the Real Server sees traffic originating from 10.0.0.15 (LoadMaster Virtual Service address on **eth0**) and responds to **eth0** which could cause asymmetric routing.

When **Subnet Originating Requests** is enabled globally, it is automatically enabled on all Virtual Services. If the **Subnet Originating Requests** option is disabled globally, you can choose whether to enable **Subnet Originating Requests** on a per-Virtual Service basis.

To enable **Subnet Originating Requests** globally, follow the steps below:

1. In the main menu of the LoadMaster User Interface (UI), go to **System Configuration > Miscellaneous Options > Network Options**.
2. Select the **Subnet Originating Requests** check box.

© 2022 Progress Software Corporation and/or one of its subsidiaries or affiliates. All rights reserved.

5 LoadMaster Virtual Services

This step-by-step setup of Virtual Services leverages the Kemp application template for IBM Cloud Object Storage with Layer 7.

Layer 7 by default does not use transparency and therefore the IP address of the LoadMaster is used when accessing the IBM Accesser Nodes. The X-Forwarded-For header is leveraged to provide the original source IP address in the Accesser logs for troubleshooting purposes. When a secure connection is used, a certificate must be installed on the LoadMaster to decrypt the traffic for the X-Forwarded-For header insertion. This traffic can then be re-encrypted or offloaded depending on the security requirements.

The table in each section outlines the settings configured by the application template. You can use this information to manually configure Virtual Services or using the Kemp LoadMaster Application Programming Interface (API) and automation tools.

There are three supported configurations:

- **SSL pass-through:** The SSL certificate is installed on IBM COS Accesser Nodes as a custom server certificate.
- **SSL termination and reencryption:** This might be beneficial if you are already doing SSL certificate management on the load balancer rather than installing the SSL certificate on the IBM COS Accesser nodes. This configuration provides the additional security benefit of limiting the attack surface to the LoadMaster.
- **SSL termination with HTTP:** In this configuration, SSL is terminated on the LoadMaster and communication from the LoadMaster to IBM COS Accesser is non-encrypted to take advantage of SSL offload.

5.1 Create a Virtual Service using a Template

To configure a Virtual Service using the application template, perform the following steps:

1. In the main menu of the LoadMaster WUI, go to **Virtual Services > Add New**.
2. Type a valid **Virtual Address**.
3. Select the appropriate template in the **Use Template** drop-down list.
4. Click **Add this Virtual Service**.
5. **Required only for TLS/SSL Offload and Reencrypt:** Expand the **SSL Properties** section.

© 2022 Progress Software Corporation and/or one of its subsidiaries or affiliates. All rights reserved.

6. **Required only for TLS/SSL Offload and Reencrypt:** Select the certificate to use from **Available Certificates** and click the arrow (**>**) to move it to **Assigned Certificates**.

7. Expand the **Real Servers** section.

8. Click **Add New**.

9. Type the **Real Server Address**.

10. Confirm that the correct port is entered.

11. Click **Add This Real Server**.

12. Add any additional Real Servers.

5.2 IBM COS Accesser S3 Virtual Services

The following section outlines the Layer 7 configuration options for using S3 with IBM Cloud Object Storage.

5.2.1 S3 HTTP Virtual Service Recommended API Settings (optional)

This table outlines the API parameters and values set using the Kemp application template. You can use these settings with scripts and automation tools.

API Parameter	API Value
port	80
prot	tcp
VStype	http
SubnetOriginating	1
Schedule	lc
AddVia	1
CheckType	tcp
CheckPort	80

5.2.2 S3 HTTPS Passthrough Virtual Service Recommended API Settings (optional)

This table outlines the API parameters and values set using the Kemp application template. You can use these settings with scripts and automation tools.

© 2022 Progress Software Corporation and/or one of its subsidiaries or affiliates. All rights reserved.

API Parameter	API Value
port	443
prot	tcp
VStype	http
SubnetOriginating	1
Schedule	lc
CheckType	tcp
CheckPort	443

5.2.3 S3 HTTPS Offloaded Virtual Service Recommended API Settings (optional)

This table outlines the API parameters and values set using the Kemp application template. You can use these settings with scripts and automation tools.

API Parameter	API Value
port	443
prot	tcp
VStype	http
SubnetOriginating	1
Schedule	lc
SSLAcceleration	1
AddVia	1
TLSType	1
CipherSet	BestPractices
CheckType	tcp
CheckPort	80

5.2.4 S3 HTTPS Reencrypted Virtual Service Recommended API Settings (optional)

This table outlines the API parameters and values set using the Kemp application template. You can use these settings with scripts and automation tools.

© 2022 Progress Software Corporation and/or one of its subsidiaries or affiliates. All rights reserved.

API Parameter	API Value
port	443
prot	tcp
VStype	http
SubnetOriginating	1
Schedule	lc
SSLAcceleration	1
SSLReencrypt	1
AddVia	1
TLSType	1
CipherSet	BestPractices
CheckType	tcp
CheckPort	443

© 2022 Progress Software Corporation and/or one of its subsidiaries or affiliates. All rights reserved.

6 Troubleshooting

Refer to the sections below for details on some common issues seen when load balancing the IBM COS workload.

6.1 Connections Rejected

When using a non-default TCP port or offloading for IBM COS services, you must ensure the Real Server port is correct. This is a common mistake when configuring the Real Servers when the Virtual Services port is different from the Real Server port. See the table in the **IBM Cloud Object Storage** section of this document for the required Real Server ports for COS.

6.2 Source/Client IP Visibility

If the client source IP address is required for audit logging, configure your load balancer so that it passes the requests through with the original requesting IP address.

© 2022 Progress Software Corporation and/or one of its subsidiaries or affiliates. All rights reserved.

7 References

Some resources on IBM Cloud Object Storage are listed below:

IBM Cloud Object Storage Solutions

Useful, related Kemp documents are listed below:

SSL Accelerated Services Feature Description

Transparency Feature Description

RESTful API Interface Description

© 2022 Progress Software Corporation and/or one of its subsidiaries or affiliates. All rights reserved.

Last Updated Date

This document was last updated on 28 July 2023.

© 2022 Progress Software Corporation and/or one of its subsidiaries or affiliates. All rights reserved.